Power Take-offs

Series HM589 | Series HM542

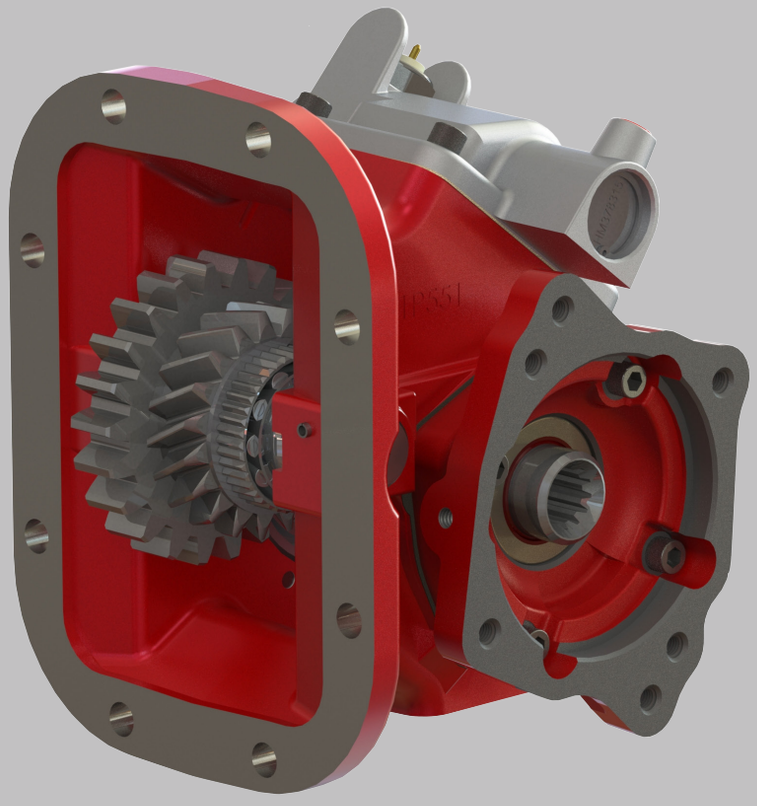

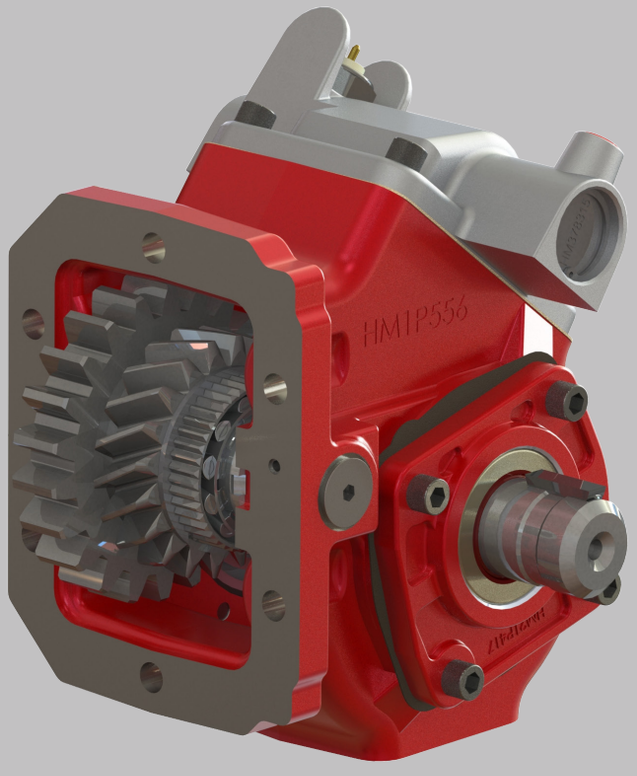

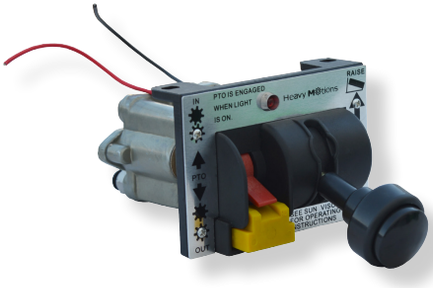

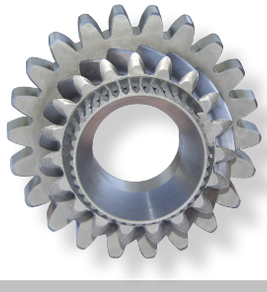

your source for your mobile hydraulic needs

Replacement Parts for

Chelsea®- 489 Series | Chelsea®- 442 Series

HEAVY MOTIONS

July 2017

Heavy Motions PTOs

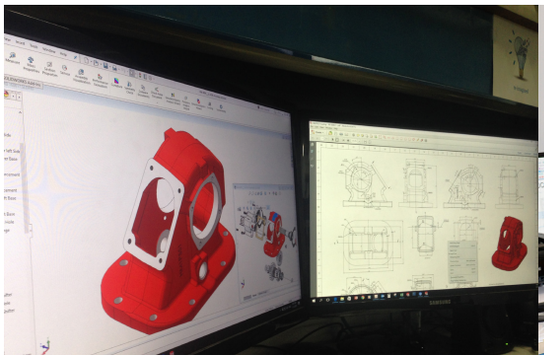

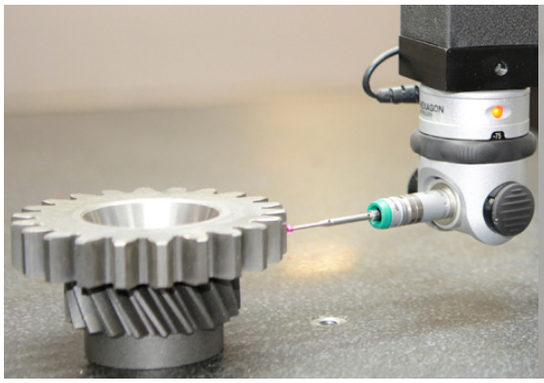
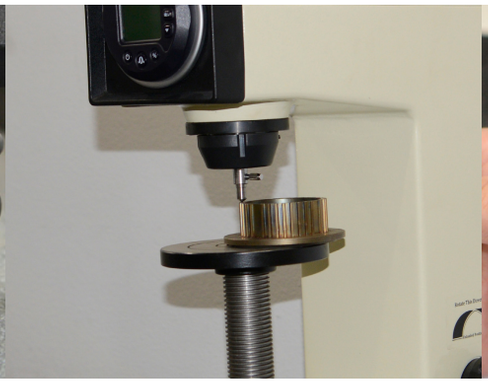
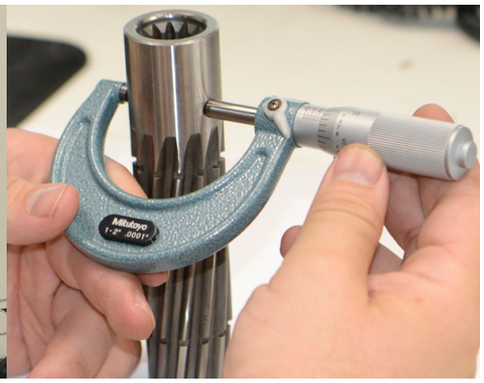

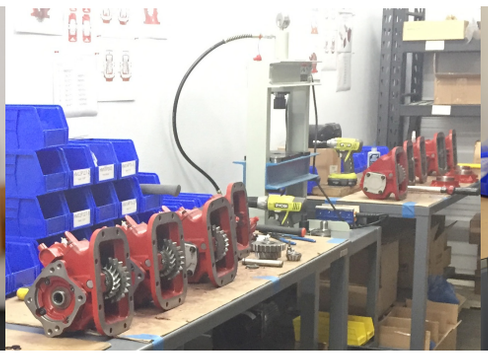
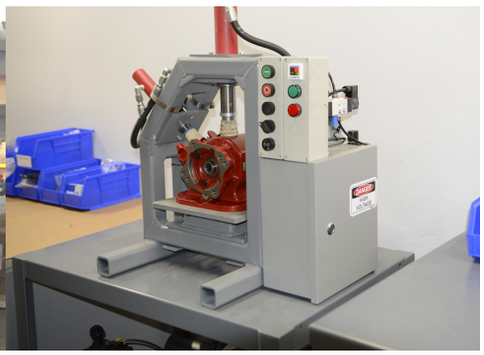

WARNING

FAILURE OR IMPROPER SELECTION OR IMPROPER USE OF THE PRODUCTS AND/OR SYSTEMS DESCRIBED HEREIN OR RELATED ITEMS CAN CAUSE DEATH, PERSONAL INJURY AND PROPERTY DAMAGE.

This document and other information from Heavy Motions Inc., its subsidiaries and authorized distributors provide product and/or system options for further investigation by users having technical expertise. It is important that you analyze all aspects of your application and review the information concerning the product or system in the current product catalog. Due to the variety of operating conditions and applications for these products or systems, the user, through its own analysis and testing, is solely responsible for making the final selection of the products and systems and assuring that all performance, safety and warning requirements of the application are met.

The products described herein, including without limitation, product features, specifications, designs, availability and pricing, are subject to change by Heavy Motions Inc. and its subsidiaries at any time without notice.

Please note: All parts supplied are Heavy Motions®. The use of other manufactures' names, part numbers, descriptions or trademarks is for cross reference and informational purposes only.

CONTENT

Page 4
Exploded View - Six Bolt PTOs

Page 5-6
Parts List - Six Bolt PTOs

Page 7
Input and Ratio Gears - Six Bolt PTOs

Page 8
Exploded View - Eight Bolt PTOs

Page 9-10
Parts List - Eight Bolt PTOs

Page 11
Input and Ratio Gear - Eight Bolt PTOs

Page 12-13
Air Controls

Page 14
PTO Conversion Kit

Page 15
Replacement Parts for Chelsea® 277
Replacement Parts for Muncie® TG6- TG8

Page 16
Specifications

Page 17
Selecting a PTO
Suggested PTO Percentages

Page 18
Arrangement Options

Page 19
Assembly Options

Page 20
Warranty

EXPLODED VIEW - SIX BOLT PTOs

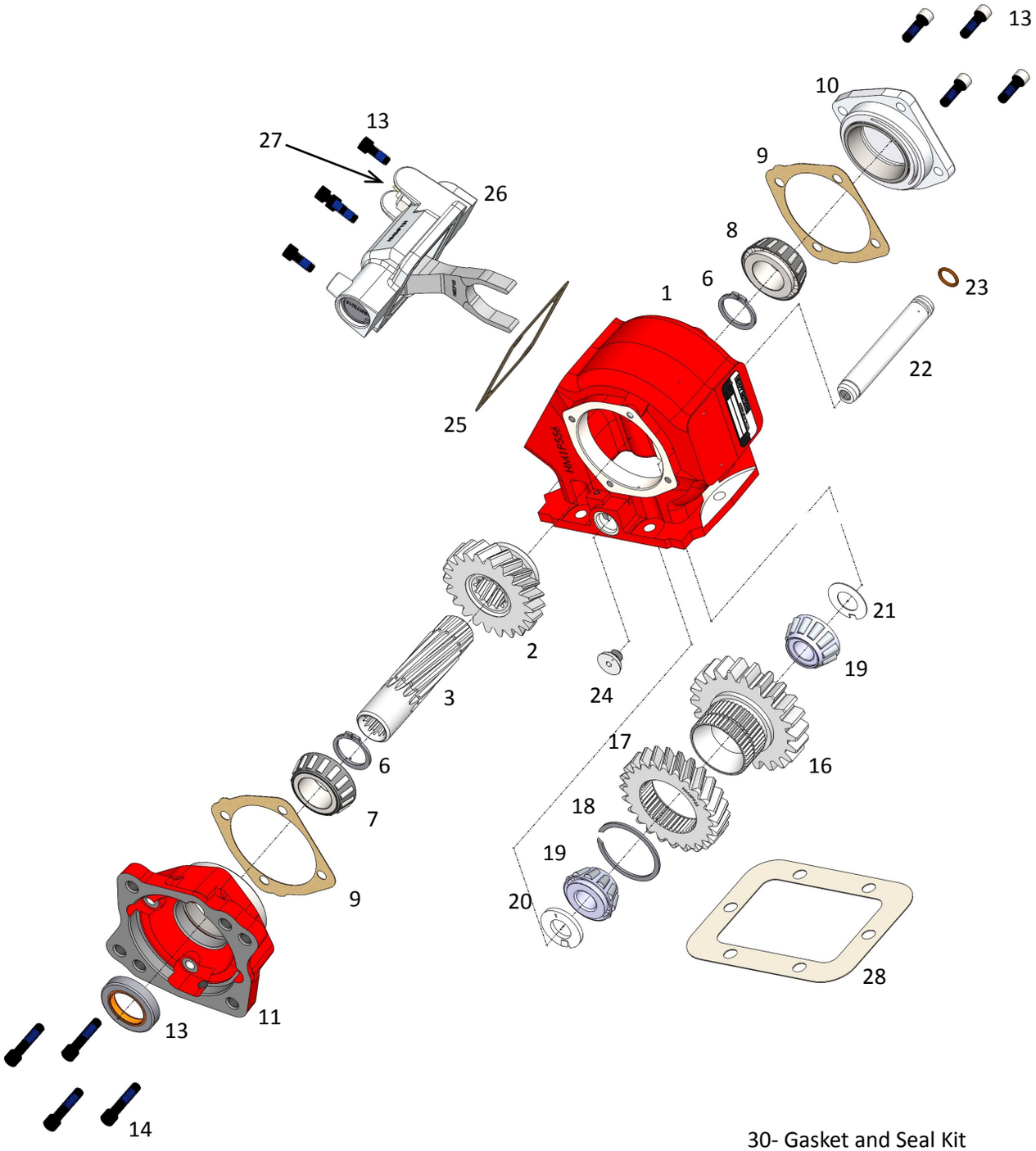

30- Gasket and Seal Kit
31- Bearing and Spacer Kit
33 - Stud Kit

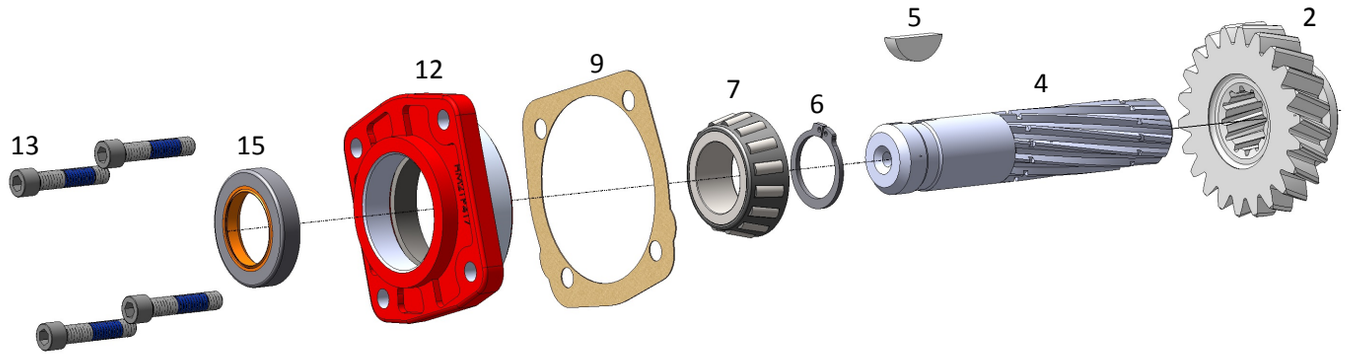

PARTS LIST - SIX BOLT PTOs

Item	Part Number	Replacement for	Description
1	**HM1P557X**	1-P-557X	Standard Mounting Housing Assembly
	HM1P558X	5-P-558X	Deep Mount Housing Assembly
2	**HM2P559**	2-P-559	Output Ratio Gear (Q/R)
	HM2P726	2-P-726	Output Ratio Gear (F)
	HM2P560	2-P-560	Output Ratio Gear (U)
	HM2P561	2-P-561	Output Ratio Gear (W)
	HM2P637	2-P-637	Output Ratio Gear (S)
	HM2P727	2-P-727	Output Ratio Gear (L)
	HM2P728	2-P-728	Output Ratio Gear (X)
3	**HM3P282**	3-P-282	Output Shaft Direct 7/8” - 13 Tooth
4	**HM3P202**	3-P-202	Output 1-1/4” Keyed
5	**HM500007-29**	500007-29	Key, Woodruff
6	**HM378391**	378391	Retaining Ring
7	**HM550397**	550397	Bearing Cone
8	**HM550532**	550532	Bearing Cone
9	**HM22P127-1**	22-P-127-1	Gasket 0.010”
	HM22P127-2	22-P-127-2	Gasket 0.020”
	HM22P127-3	22-P-127-3	Gasket 0.015”
10	**HM328274X**	328274X	Bearing Cap Assembly
11	**HM328333X**	328333X	Flange Assembly
12	**HM328273X**	328273X	Bearing Cap Open End
13	**HM378447-6**	378447-6	Capscrew
14	**HM378447-8**	378447-8	Capscrew
15	**HM28P216**	28-P-216	Shaft Seal
16	**HM5P1004**	5-P-1004	Input Gear (AH)
	HM5P1015	5-P-1015	Input Gear (BG)
	HM5P1037	5-P-1037	Input Gear (DA)
	HM5P1059	5-P-1059	Input Gear (ES)
	HM5P1077	5-P-1077	Input Gear (FAH)

PARTS LIST - SIX BOLT PTOs CONT.

Item	Part Number	Replacement for	Description
17	**HM5P964X**	5-P-964X	Input Ratio Gear (L)
	HM5P965X	5-P-965X	Input Ratio Gear (Q)
	HM5P966X	5-P-966X	Input Ratio Gear (S)
	HM5P967X	5-P-967X	Input Ratio Gear (U)
	HM5P968X	5-P-968X	Input Ratio Gear (W)
	HM5P969X	5-P-969X	Input Ratio Gear (X)
	HM5P1214X	5-P-1214X	Input Ratio Gear (R)
18	**HM379522**	379522	Retaining Ring
19	**HM550439**	550439	Bearing Cone
20	**HM14P-73-1**	14-P-73-1	Spacer 0.149”-0.151”
	HM14P73-2	14-P-73-2	Spacer 0.152”-0.154”
	HM14P73-3	14-P-73-3	Spacer 0.155”-0.157”
21	**HM31P102**	31-P-102	Thrust Washer
22	**HM9P88**	9-P-88	Idler Shaft
23	**HM28P191**	28-P-191	O-Ring
24	**HM379672**	379672	Plug
25	**HM35P8**	35-P-8	Gasket
26	**HM329361X**	329361X	Air Shifter
27	**HM379639**	379639	Indicator Switch
28	**HM35P9-1**	35-P-9-1	Mounting Gasket 0.010”
	HM35P9-2	35-P-9-2	Mounting Gasket 0.020”
29	**HM379640**	379640	Connector
30	**HM328356-13X**	328356-13X	Gasket and Seal Kit
31	**HM328594-13X**	328594-13X	Bearing and Spacer Kit
32	**HM328948-6X**	328948-6X	Gasket and Installation Instructions
33	**HM328170-76X**	328170-76X	Standard Stud Kit
	HM7170-72X	7170-72X	Metric Stud Kit
	HM328170-77X	328170-77X	Deep Mount Stud Kit

INPUT GEARS

Heavy Motions Model Number	Chelsea® Model Number	Part Number	Type	Input	Teeth Ratio
HM542*FAH	**442*FAH**	HM5P1077	Spur	22	21
HM542AH**	**442**AH**	HM5P1004	Spur	22	
HM542BG**	**442**BG**	HM5P1015	Left Helix	23	
HM542DA**	**442**DA**	HM5P1037	Spur	23	
HM542ES**	**442**ES**	HM5P1059	Left Helix	22	

RATIO GEARS

		INPUT RATIO GEAR		OUTPUT GEAR	
Heavy Motions Model Number	Chelsea® Model Number	Part Number	Teeth	Part Number	Teeth
HM542*F	**442*F**			HM2P726	37
HM542*L	**442*L**	HM5P964	25	HM2P727	34
HM542*Q	**442*Q**	HM5P965	19	HM2P559	24
HM542*R	**442*R**	HM5P1214	22	HM2P559	24
HM542*S	**442*S**	HM5P966	24	HM2P637	22
HM542*U	**442*U**	HM5P967	26	HM2P560	20
HM542*W	**442*W**	HM5P968	26	HM2P561	17
HM542*X	**442*X**	HM5P969	38	HM2P728	21

EXPLODED VIEW - EIGHT BOLT PTOs

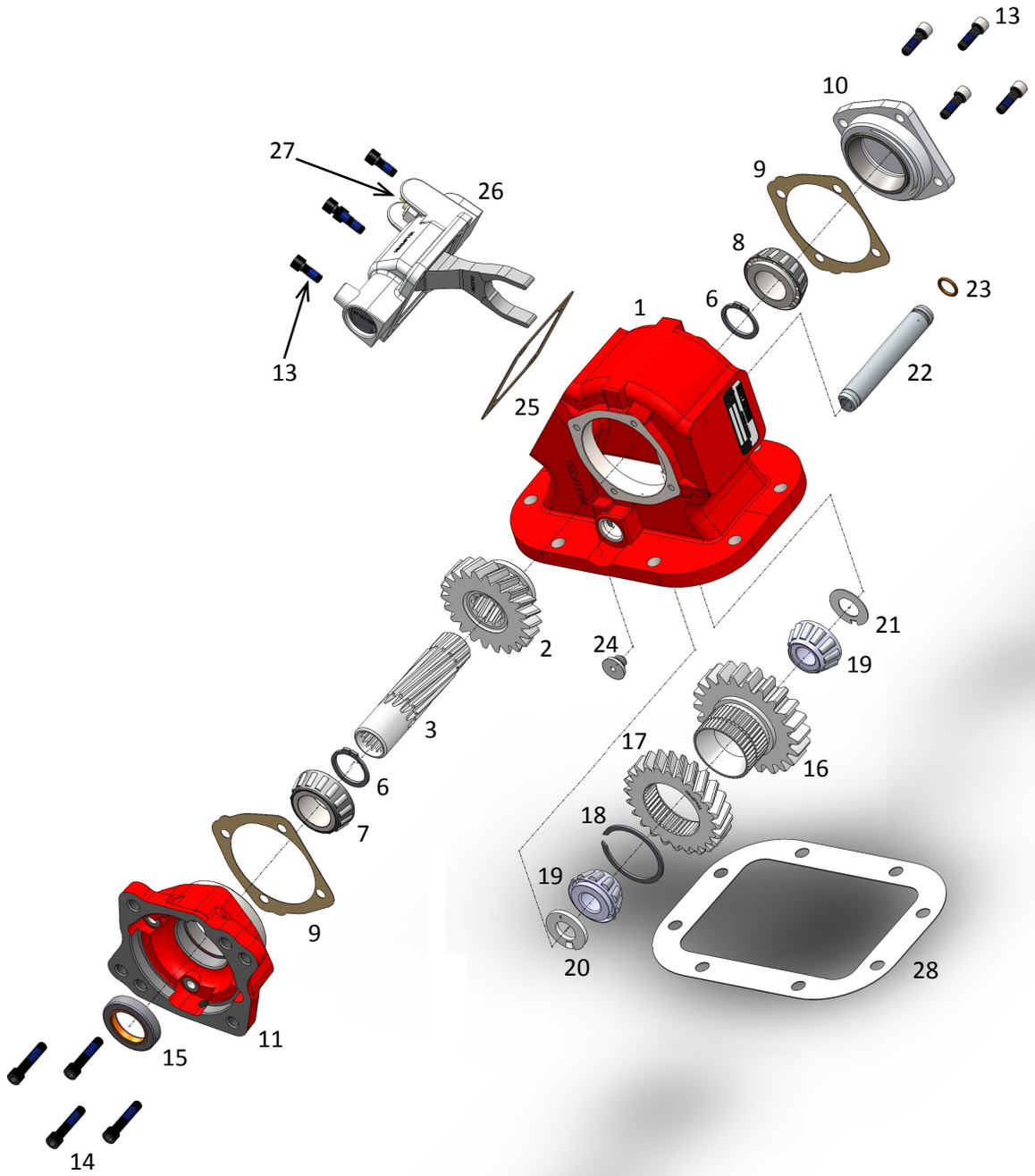

30 - Gasket and Seal Kit
31 - Bearing and Spacer Kit
33 - Stud Kit

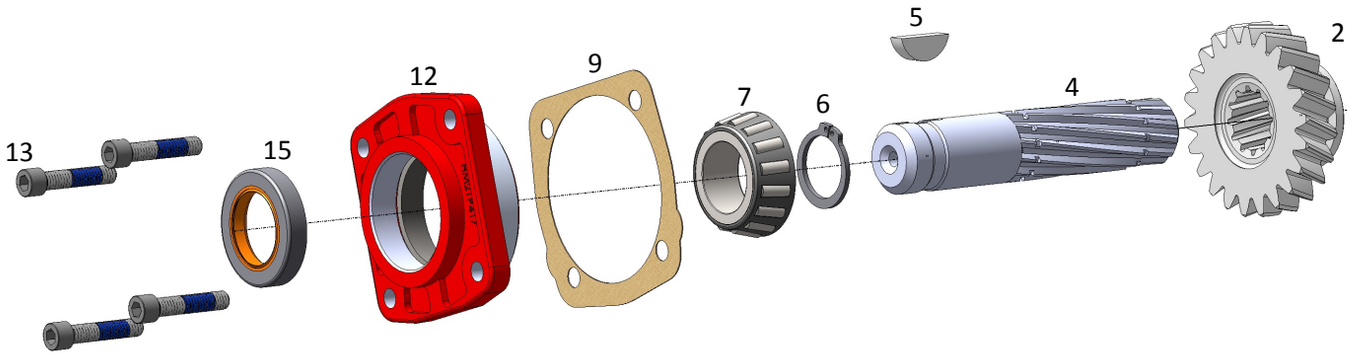

PARTS LIST - EIGHT BOLT PTOs

Item	Part Number	Replacement for	Description
1	**HM1P552X**	1-P-552X	Standard Mounting Housing Assembly
	HM1P562X	5-P-562X	Deep Mount Housing Assembly
2	**HM2P559**	2-P-559	Output Ratio Gear (Q/R)
	HM2P726	2-P-726	Output Ratio Gear (F)
	HM2P560	2-P-560	Output Ratio Gear (U)
	HM2P561	2-P-561	Output Ratio Gear (W)
	HM2P637	2-P-637	Output Ratio Gear (S)
	HM2P727	2-P-727	Output Ratio Gear (L)
	HM2P728	2-P-728	Output Ratio Gear (X)
3	**HM3P282**	3-P-282	Output Shaft Direct 7/8” - 13 Tooth
4	**HM3P202**	3-P-202	Output Shaft 1-1/4” Keyed
5	**HM500007-29**	500007-29	Key Woodruff
6	**HM378391**	378391	Retaining Ring
7	**HM550397**	550397	Bearing Cone
8	**HM550532**	550532	Bearing Cone
9	**HM22P127-1**	22-P-127-1	Gasket 0.010”
	HM22P127-2	22-P-127-2	Gasket 0.020”
	HM22P127-3	22-P-127-3	Gasket 0.015”
10	**HM328274X**	328274X	Bearing Cap Assembly
11	**HM328333X**	328333X	Flange Assembly
12	**HM328273X**	328273X	Bearing Cap Open End
13	**HM378447-6**	378447-6	Capscrew
14	**HM378447-8**	378447-8	Capscrew
15	**HM28P216**	28-P-216	Shaft Seal
16	**HM5P1004**	5-P-1004	Input Gear (AH)
	HM5P1015	5-P-1015	Input Gear (BG)
	HM5P1037	5-P-1037	Input Gear (DA)
	HM5P1059	5-P-1059	Input Gear (ES)
	HM5P1077	5-P-1077	Input Gear (FAH)

PARTS LIST - EIGHT BOLT PTOs CONT.

Item	Part Number	Replacement for	Description
17	**HM5P964X**	5-P-964X	Input Ratio Gear (L)
	HM5P965X	5-P-965X	Input Ratio Gear (Q)
	HM5P966X	5-P-966X	Input Ratio Gear (S)
	HM5P967X	5-P-967X	Input Ratio Gear (U)
	HM5P968X	5-P-968X	Input Ratio Gear (W)
	HM5P969X	5-P-969X	Input Ratio Gear (X)
	HM5P1214X	5-P-1214X	Input Ratio Gear (R)
18	**HM379522**	379522	Retaining Ring
19	**HM550439**	550439	Bearing Cone
20	**HM14P73-1**	14-P-73-1	Spacer 0.149”-0.151”
	HM14P73-2	14-P-73-2	Spacer 0.152”-0.154”
	HM14P73-3	14-P-73-3	Spacer 0.155”-0.157”
21	**HM31P102**	31-P-102	Thrust Washer
22	**HM9P88**	9-P-88	Idler Shaft
23	**HM28P191**	28-P-191	O-Ring
24	**HM379672**	379672	Plug
25	**HM35P8**	35-P-8	Gasket
26	**HM329361X**	329361X	Air Shifter
27	**HM379639**	379639	Indicator Switch
28	**HM35P15-1**	35-P-15-1	Mounting Gasket 0.010”
	HM35P15-2	35-P-15-2	Mounting Gasket 0.020”
29	**HM379640**	379640	Connector
30	**HM328356-50X**	328356-50X	Gasket and Seal Kit
31	HM328594-13X	328594-13X	Bearing and Spacer Kit
32	**HM328948-8X**	328948-8X	Gasket and Installation Instructions
33	**HM328170-200X**	328170-200X	Standard Stud Kit
	HM328170-201X	328170-201X	Metric Stud Kit

INPUT GEARS

Heavy Motions Model Number	Chelsea® Model Number	Part Number	Type	Input	Teeth Ratio
HM589*FAH	**489*FAH**	HM5P1077	Spur	22	21
HM589AH**	**489**AH**	HM5P1004	Spur	22	
HM589BG**	**489**BG**	HM5P1015	Left Helix	23	
HM589DA**	**489**DA**	HM5P1037	Spur	23	

RATIO GEARS

		INPUT RATIO GEAR		OUTPUT GEAR	
Heavy Motions Model Number	Chelsea® Model Number	Part Number	Teeth	Part Number	Teeth
HM589*F	**489*F**			HM2P726	37
HM589*L	**489*L**	HM5P964	25	HM2P727	34
HM589*Q	**489*Q**	HM5P965	19	HM2P559	24
HM589*R	**489*R**	HM5P1214	22	HM2P559	24
HM589*S	**489*S**	HM5P966	24	HM2P637	22
HM589*U	**489*U**	HM5P967	26	HM2P560	20
HM589*W	**489*W**	HM5P968	26	HM2P561	17
HM589*X	**489*X**	HM5P969	38	HM2P728	21

PTO KITS - AIR CONTROLS

HM101V	PTO Shift Valve Assembly
Replacement for	
Chelsea	329648X
	• Positive Locking Two Position, Three way
	• Spring Loaded Lockout Safety Knob
	• Push-to-Connect Fittings
	• Includes Indicator Light

HM101S-LH	PTO Shift Valve Kit
Contains :	
HM101V	PTO Shift Valve Assembly
HM1PPV	Pressure Protection Valve
	• Positive Locking Two Position, Three way
	• Spring Loaded Lockout Safety Knob
	• Push-to-Connect Fittings
	• Includes Indicator Light

HM103WK	PTO Combo Valve
Replacement for	
Chelsea	329358X
	• Prevents accidental PTO engagement
	• With kick out function
	• Controlled lowering of the body
	• Push-to-Connect Fittings

HM503WK	PTO Combo Valve - Small Design
	• Prevents accidental PTO engagement
	• With kick out function
	• Controlled lowering of the body
	• Push-to-Connect Fittings

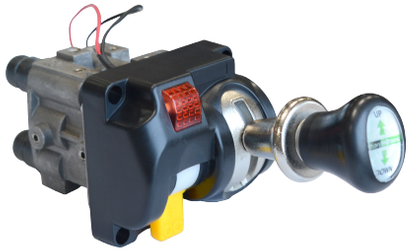

PTO KITS - AIR CONTROLS Cont.

HM1PPV	Pressure Protection Valve
Replacement for	
Chelsea	378414
Muncie	31M15759
	328863X
	• Opens at 60-70 psi

HM103WKT	PTO Combo Valve W/ Tower
Replacement for	
Apsco	AV295C
Contains :	
HM103WK	PTO Combo Valve
HMTOWER-8	Tower / Console
	• With Kick out Function
	• Controlled lowering of the body
	• Push-to-Connect Fittings
	• Universal 8" Tower

HMTOWER-8	Tower/Console
Replacement for	
Chelsea	329219X
	• Use with PTO Combo Valve
	• Universal 8” Tower
	• Dimensions: 8” x 4 5/8” x 3 ¼”
	• Base: 4 5/8” x 5”

HM1TB	Air Tubing
Replacement for	
Chelsea	379044-7
Muncie	45M44430
	• 1/4" Diameter
	• 30 ft. Long

HM1IL	Indicator Light
	• Fits Valve HM101V

HM379640	PTO Wire for Ball Switch Connector
Replacement for	
Chelsea	379640
	• Used with HM329361 Air Shifter

PTO CONVERSION KIT

HM328591-16X			
Replacement for	328591-16X		
Chelsea			
	Converts remote mount HM589 and Chelsea 442 and 489 series PTO to a direct mount PTO.		
Contains :	HM328333X	Flange Assembly	Qty: 1
	HM3P282	Output Shaft 7/8”	Qty: 1
	HM28P216	Shaft Seal	Qty: 1
	HM378447-8	Capscrew	Qty: 4
	HM378391	Retaining Ring	Qty: 2
	HM379688A	Spline Lubricant	Qty: 2
	HM22P127-1	Gasket 0.010”	Qty: 2
	HM22P127-2	Gasket 0.020”	Qty: 2
	HM22P127-3	Gasket 0.015”	Qty: 1

FEATURED PRODUCTS

REPLACEMENT PARTS FOR CHELSEA® 277

FRICTION DISK

Heavy Motions	Replaces P/N	Description
HM379485	379485	Friction Disk

CLUTCH PLATE

Heavy Motions	Replaces P/N	Description
HM379595	379595	Clutch Plate

SHAFT

Heavy Motions	Replaces P/N	Description
HM3P1051	3-P-1051	Output Shaft 7/8”-13 Tooth

REPLACEMENT PARTS FOR MUNCIE® TG6 & TG8

Parts are 100% interchangeable with those used in Muncie’s® TG Series PTOs.

GEARS

Heavy Motions	Replaces P/N	Description	Pitch	Teeth
HM03T34284	03T34284	Input Gear	U68	24
HM03T34453	03T34453	Input Gear	C70	24
HM03T38546	03T38546	Input Gear	T81	29

SHAFTS

Heavy Motions	Replaces P/N	Description	Output Type	Dimensions
HM06T33963	06T33963	Output Shaft	“B” Remote Mount	1 1/4” Round
HM06T39143	06T39143	Output Shaft	“M”, “K”, “6” Hyd Shaft	7/8” – 13 Tooth

GASKETS

Heavy Motions	Replaces P/N	Description	Holes	Thickness
HMGA6010	13M35091	Mounting Gasket	6	0.10”
HMGA6015	13M35092	Mounting Gasket	6	0.20”
HMGA8010	13M35151	Mounting Gasket	8	0.10”
HMGA8015	13M35152	Mounting Gasket	8	0.20”

STUD KITS

Heavy Motions	Replaces P/N	Description	Models
HM6SKS	20MK6700	6 bolt Std Mounting Kit	TG6S, TG6D
HM6SKM	20MKM602	6 bolt Metric Mounting Kit	TG6B, TG6C
HM8SKS	20MK8801	8 bolt Std Mounting Kit	TG8S, TG8D, TG8M
HM8SKM	20MKM801	8 bolt Metric Mounting Kit	TG8B, TG8C

MISCELLANEOUS

Heavy Motions	Replaces P/N	Description
HM1PPV	31M15759	Pressure Protection Valve
HM1TB	45M44430	Air Tubing 1/4 – 30ft

SPECIFICATIONS

Ratio	F	Q	R
Torque Intermittent Service (Lb. ft)	250	225	225
Torque Intermittent Service (N.m)	339	305	305
Power @ 500 RPM (HP)	24	21	21
Power @ 1,000 RPM (HP)	48	43	43
Power @ 500 RPM (KW)	18	16	16
Power @ 1,000 RPM (KW)	36	32	32
Approximate Weight (KG)		30lbs (13.6 Kg)	

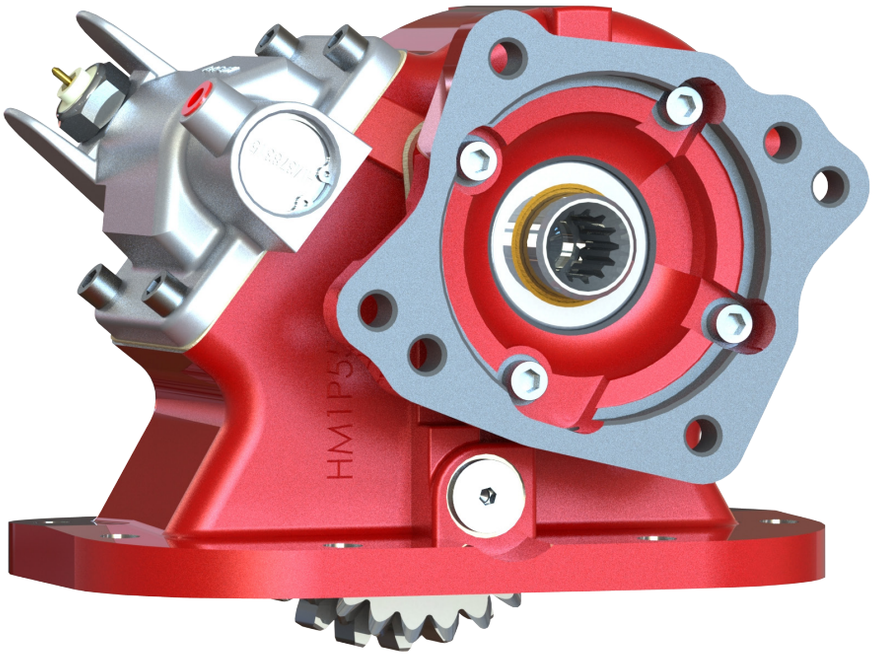

SELECTING A PTO

Please have the following information ready when selecting a new or replaced PTO.

TRANSMISSION MAKE AND MODEL:_____

MOUNTING LOCATION: BOTTOM, SIDE

PERCENTAGE OF ENGINE SPEED: ___% (See below for suggestions)

OUTPUT TYPE: SPLINED 13T [___] 1-1/4" Round Shaft [___]

SHIFTER: AIR SHIFT [___]

IF AIR, CAB CONTROL: PTO ONLY [___], DUAL (PTO/PUMP) [___]

CONTROL TOWER: YES [___], NO [___]

SUGGESTED PTO PERCENTAGES

Common uses are suggested below. Please be sure to match the PTO with the right pump flow requirements.

APPLICATION	PTO %
Dump Body - Small Single Axle	60%-90%
Dump Body - Medium Double Axle	80%-100%
Dump Body - Large, Tri-Axle	100%-120%
Dump Trailers	100%-120%
Moving Floors	90%-120%

ARRANGEMENT OPTIONS

To identify the proper arrangement, place the PTO with the input gear facing you and the shifter up.

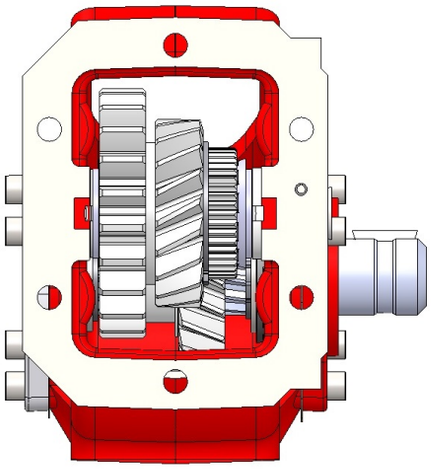

3
Right Side Output
Forward Input Gear

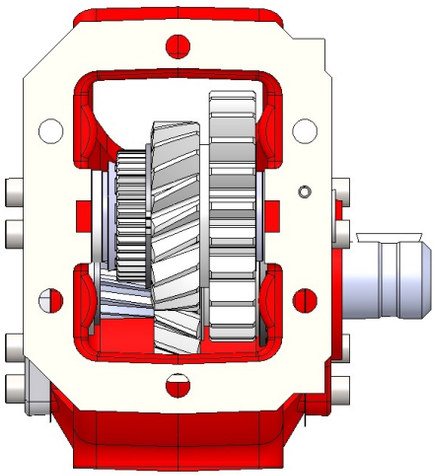

4
Right Side Output
Rear Input Gear

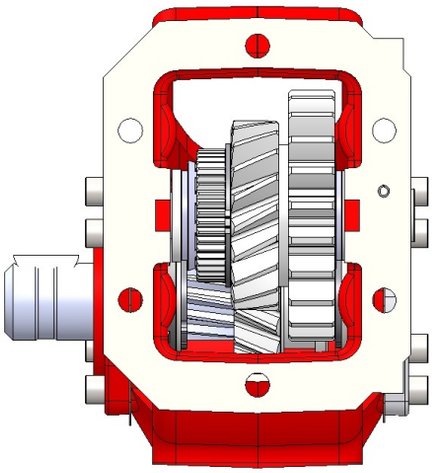

5
Left Side Output
Forward Input Gear

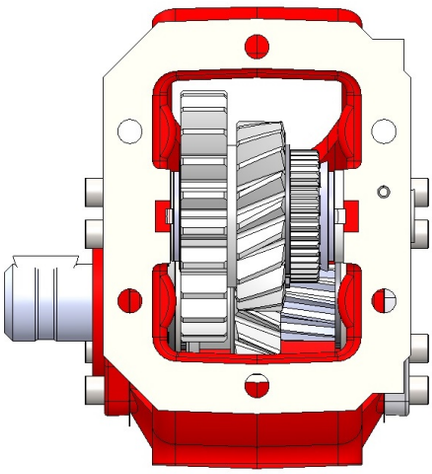

6
Left Side Output
Rear Input Gear

Series HM589	Chelsea ®	Muncie ®
3	3	1
4	4	2
5	5	3
6	6	4

ASSEMBLY OPTIONS

HM589 X F AH X – A 3 XK

Model

HM589	8 Bolt
HM542	6 Bolt

Output Options

XK	SAE “B” 2/4 Bolt 7/8” 13T
XD	1-1/4” Standard Shaft

Assembly Arrangement

3	Right, Foward
4	Right, Rear
5	Left, Forward
6	Left, Rear

Mounting

X	Standard Mount
K	Standard Mount Less Stud Kit
G	Standard Mount with Metric Stud Kit
L	Deep Mount Less Stud Kit
Z	Deep Mount

Shift Option

A	Air Shift with Cab Control
V	Air Shift No Cab Control
S	Air Shift with PTO/Dump Pump Combo Valve

Ratio

F	21/37
L	25/34
Q	19/24
R	22/24
S	24/22
U	26/20
W	26/17
X	38/21

Lube Options

X	No Pressure Lubrication

Input Gear

IT	Without Gear
AH	Fuller Series
BG	TTC Transmission
DA	Mack Transmission
ES	Eaton Transmission

HEAVY MOTIONS, INC. PTO WARRANTY

The Heavy Motions PTOs and other parts covered in this catalog are warranted for a period of (2) two years from the date of installation against any defect in material and workmanship which existed at the time of sale by Heavy Motions Inc., according to the following provisions, subject to the requirements that the PTO must be used only in the appropriate applications and following the Installation and Owner's Manual instructions.

If during the warranty period the PTO fails due to a defect in any part in material or workmanship that existed at the time of the sale by Heavy Motions Inc., the defective part will be repaired or replaced, at the discretion of Heavy Motions Inc., at no charge, if the defective part is returned to Heavy Motions Inc. with transportation prepaid. Authorization from your sales representative is required to initiate the warranty.

WARNING: The above warranty shall terminate if any alterations or repairs are made to the PTO other than at Heavy Motions Inc.

The foregoing warranty is in lieu of all other obligations and liabilities, including negligence and all warranties of merchantability and suitability, expressed or implied, and state Heavy Motions' entire and exclusive liability and buyer's exclusive remedy for any claim of damages in connection with the sale, repair or replacement of the above goods, their design, installation or operation. Heavy Motions Inc. will in no event be liable for any direct, indirect, special, incidental or consequential damages whatsoever, and our liability under no circumstances will exceed the contract price for the goods for which liability is claimed.

Heavy Motions Inc. is not liable for any repair related cost incurred to the Buyer at any time if the repair is conducted by the buyer without written authorization from Heavy Motions Inc.

Notes

Notes

Notes

2134 S. Green Privado
Ontario, CA 91761
Toll Free: 1-866-865-8889
info@heavymotions.com
www.heavymotions.com